MAXI TEMPLATE @ 100%

Graphic image/logo safe site area

Non printable area

Allow for fold on top side of panel 1mm gap

HEADER

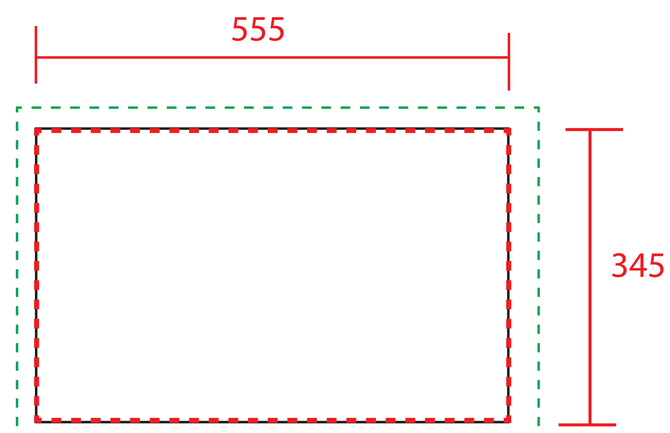

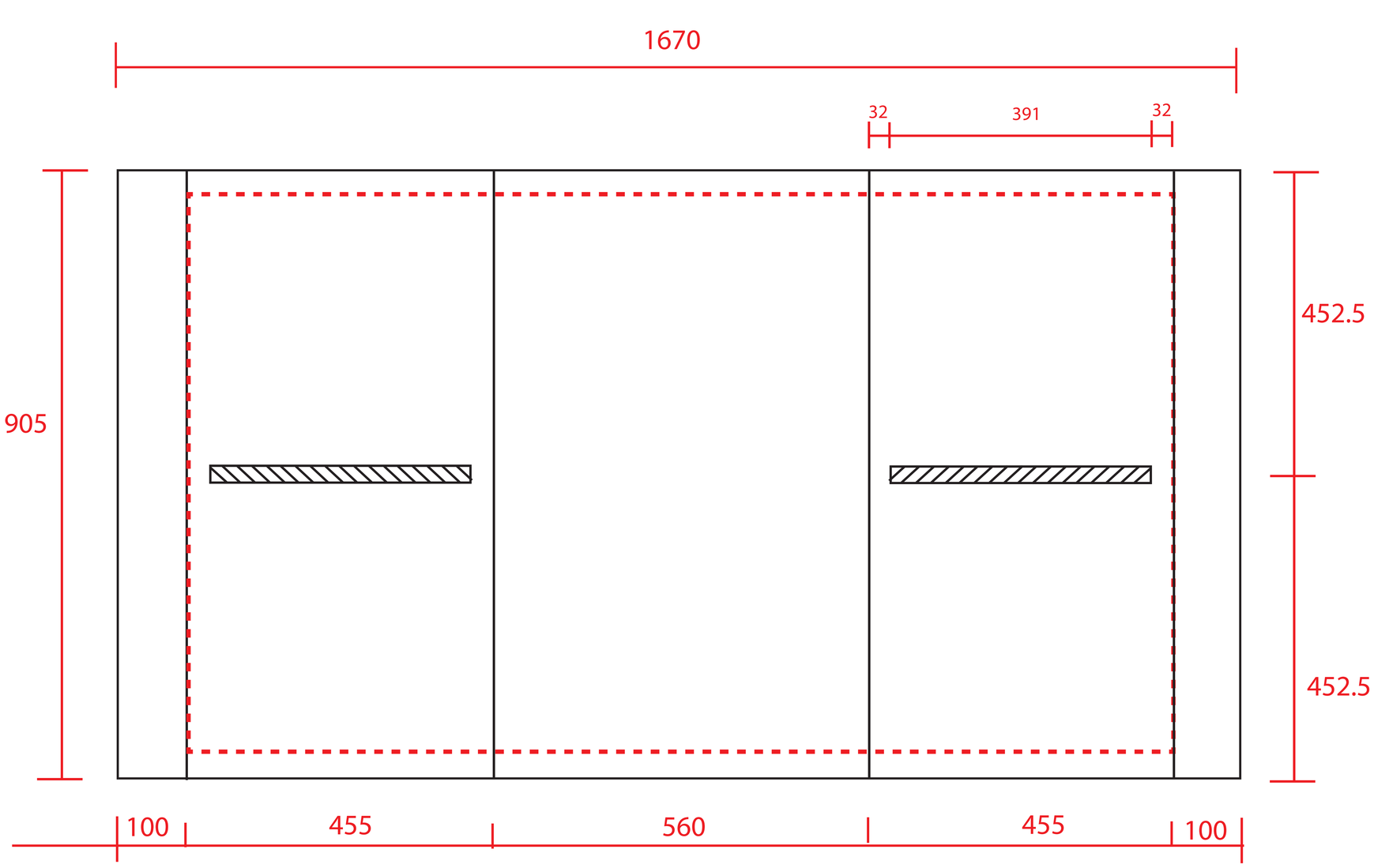

SIDE PANEL FRONT SECTION SIDE PANEL